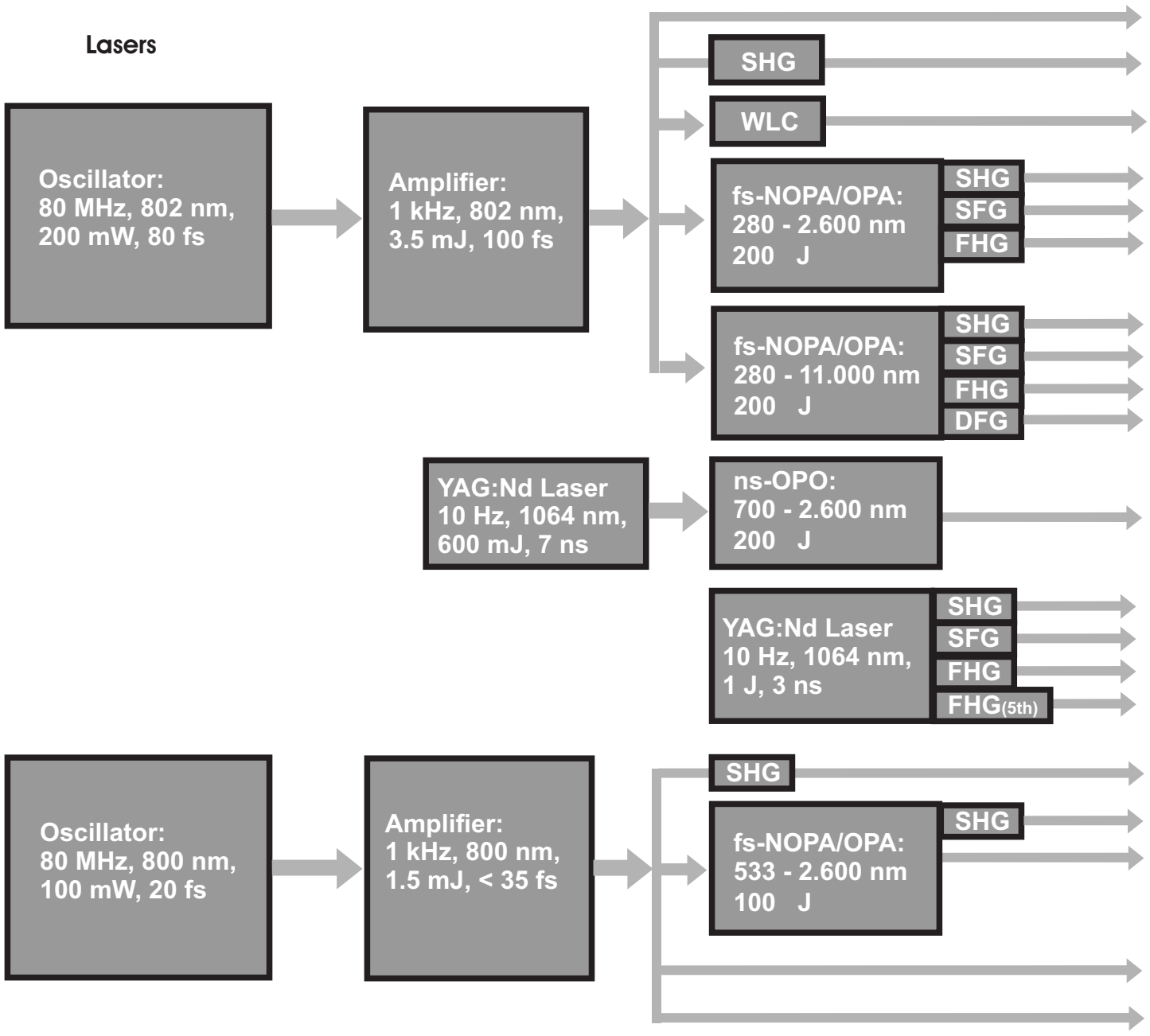

STATION 1: **< 100 fs**

fs - Z-SCAN (UV/VIS)
fs - TA(UV/VIS)
fs - HKS (VIS)
fs - TA (VIS/MIR)

tunable pump / tunable probe (VIS/MIR)
or WLC probe

1 x 512 PDA, 4 x GHz Silicon Probe
1 x 32 MCT Reference, 1 x 32 MCT Probe
1 x MCT Reference, 2 x GHz Silicon Probe

STATION 2 **< 10 ns**

ns - TA(VIS)
ns - 4WM (VIS)
ns - TL (NIR)

tunable pump (NIR) / tunable probe (VIS/MIR)

8 x GHz-DC amplified Silicon Probe
1 x PD Probe
1 x InGaAs Probe

STATION 3 **< 50 fs**

fs - UC-TL (NIR)
fs - UC/DC-spectrometer
fs - UC-TRIR
fs - TMOKE (VIS/NIR)

pump: 800 nm, 400 nm

1 x UV Spectrometer (250 - 700 nm)
1 x Spectrometer (600 - 1000 nm)
8 x GHz-DC amplified Silicon Probe